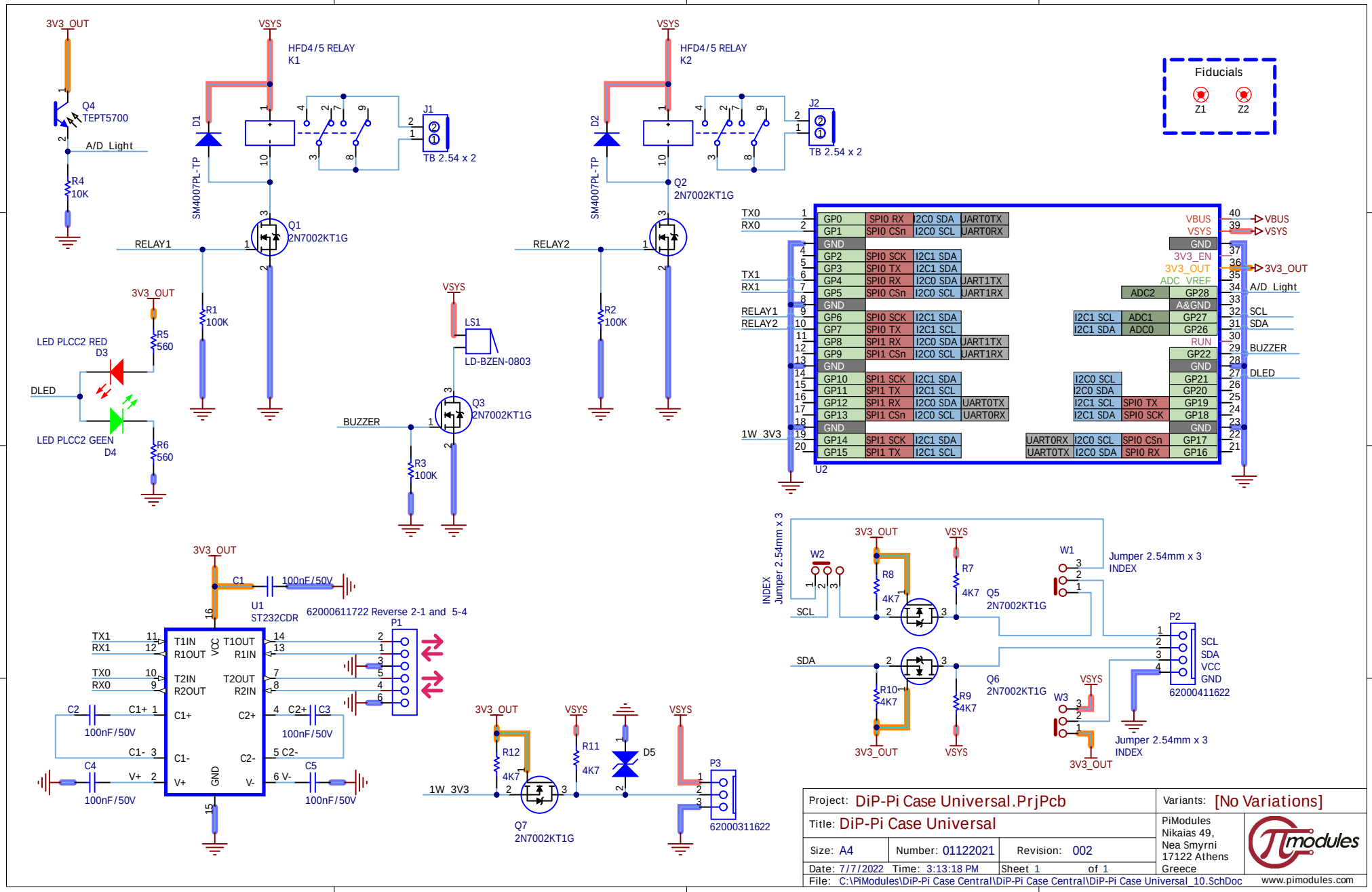

Project: DiP-Pi Case Universal.PrjPcb			Variants: [No Variations]
Title: DiP-Pi Case Universal			PiModules Nikaias 49, Nea Smyrni 17122 Athens Greece
Size: A4	Number: 01122021	Revision: 002	
Date: 7/7/2022	Time: 3:13:18 PM	Sheet 1 of 1	
File: C:\PiModules\DiP-Pi Case Central\DiP-Pi Case Central\DiP-Pi Case Universal_10.SchDoc			www.pimodules.com