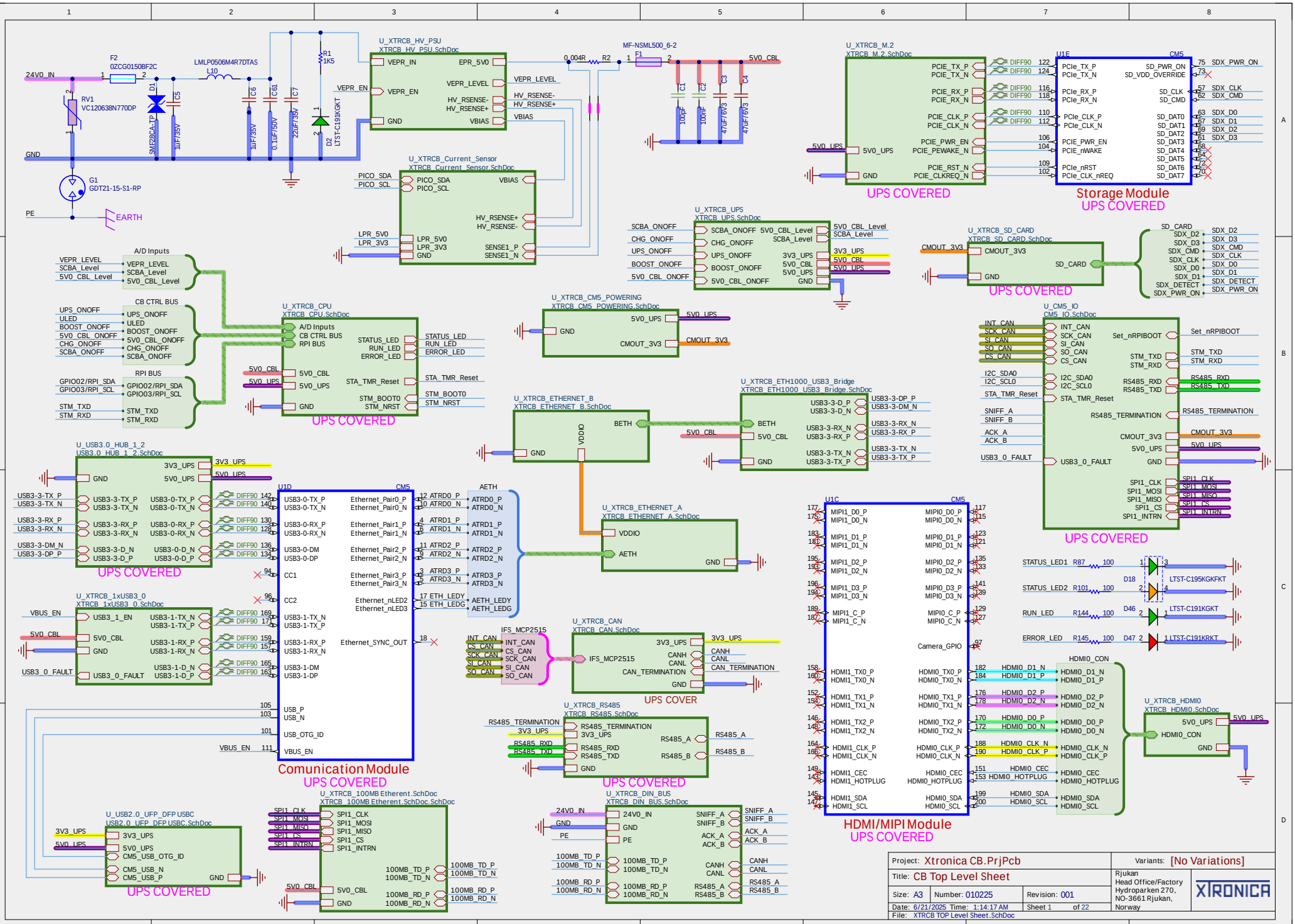
U_XTRCB_HV_PSU
XTRCB_HV_PSU.SchDoc
U_XTRCB_M.2
XTRCB_M.2.SchDoc
U1E
CM5
Storage Module
UPS COVERED
U_XTRCB_Current_Sensor
XTRCB_Current_Sensor.SchDoc
U_XTRCB_UPS
XTRCB_UPS.SchDoc
U_XTRCB_SD_CARD
XTRCB_SD_CARD.SchDoc
U_XTRCB_CPU
XTRCB_CPU.SchDoc
U_XTRCB_CM5_POWERING
XTRCB_CM5_POWERING.SchDoc
U_CM5_IO
CM5_IO.SchDoc
U_XTRCB_ETHERNET_B
XTRCB_ETHERNET_B.SchDoc
U_XTRCB_ETH1000_USB3_Bridge
XTRCB_ETH1000_USB3_Bridge.SchDoc
U_USB3.0_HUB_1_2
USB3.0_HUB_1_2.SchDoc
U_XTRCB_ETHERNET_A
XTRCB_ETHERNET_A.SchDoc
U1D
U_XTRCB_1xUSB3_0
XTRCB_1xUSB3_0.SchDoc
U_XTRCB_CAN
XTRCB_CAN.SchDoc
IFS_MCP2515
U1C
HDMI/MIPI Module
UPS COVERED
U_XTRCB_RS485
XTRCB_RS485.SchDoc
U_XTRCB_HDMI0
XTRCB_HDMI0.SchDoc
Comunication Module
UPS COVERED
U_USB2.0_UFP_DFP USBC
USB2.0_UFP_DFP USBC.SchDoc
U_XTRCB_100MB Etherent.SchDoc
XTRCB_100MB Etherent.SchDoc.SchDoc
U_XTRCB_DIN_BUS
XTRCB_DIN_BUS.SchDoc
Project: Xtronica CB.PrjPcb
Variants: [No Variations]
Title: CB Top Level Sheet
Size: A3
Number: 010225
Revision: 001
Date: 6/21/2025 Time: 1:14:17 AM
Sheet 1 of 22
File: XTRCB TOP Level Sheet.SchDoc
Rjukan
Head Office/Factory
Hydroparken 270,
NO-3661 Rjukan,
Norway
XTRONICA

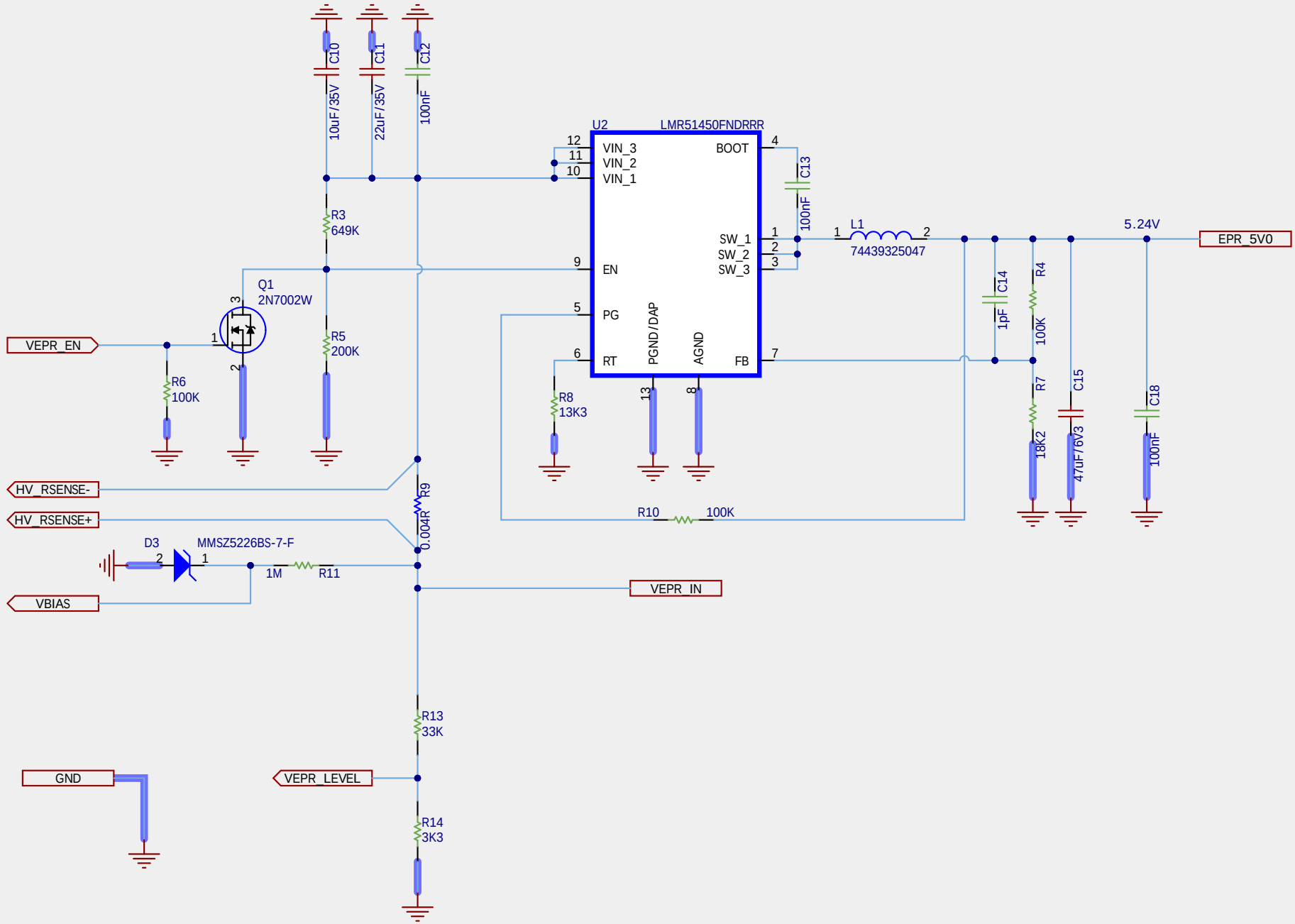

Project: Xtronica CB.PrjPcb			Variants: [No Variations]
Title: Buck Converter			Rjukan Head Office/Factory Hydroparken 270, NO-3661 Rjukan, Norway
Size: A	Number: 010225	Revision: 001	XTRONICA
Date: 6/21/2025 Time: 1:14:18 AM		Sheet 2 of 22	
File: XTRCB_HV_PSU.SchDoc		www.forwardedge.ai/isidore	

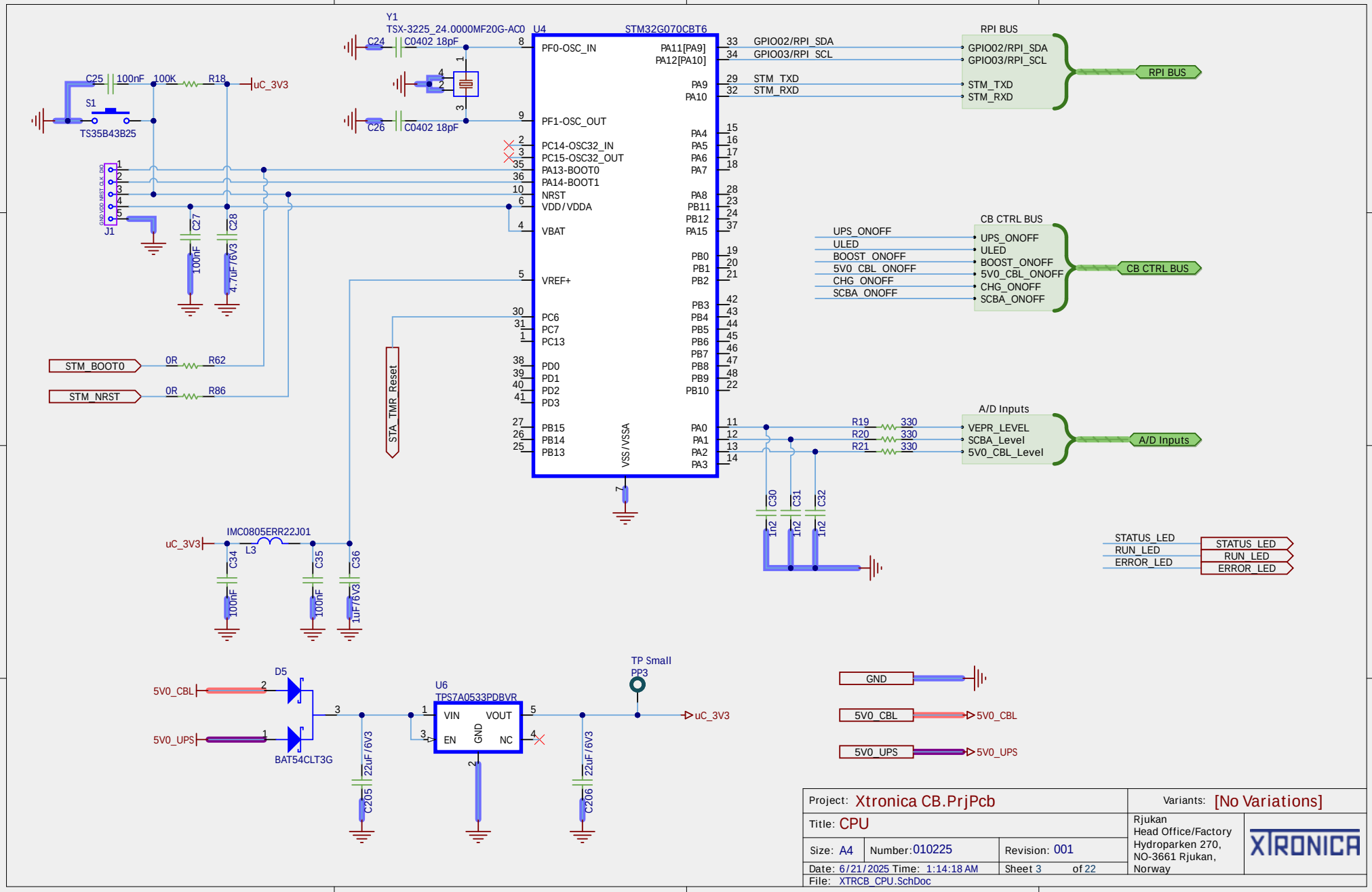
Y1
TSX-3225_24.0000MF20G-AC0
C24
C0402 18pF
C26
C0402 18pF
U4
STM32G070CBT6
PF0-OSC_IN
PF1-OSC_OUT
PC14-OSC32_IN
PC15-OSC32_OUT
PA13-BOOT0
PA14-BOOT1
NRST
VDD/VDDA
VBAT
VREF+
PC6
PC7
PC13
PD0
PD1
PD2
PD3
PB15
PB14
PB13
VSS/VSSA
PA11[PA9]
PA12[PA10]
PA9
PA10
PA4
PA5
PA6
PA7
PA8
PB11
PB12
PA15
PB0
PB1
PB2
PB3
PB4
PB5
PB6
PB7
PB8
PB9
PB10
PA0
PA1
PA2
PA3
GPIO02/RPI_SDA
GPIO03/RPI_SCL
STM_TXD
STM_RXD
RPI BUS
C25
100nF
100K
R18
uC_3V3
S1
TS35B43B25
J1
C27
100nF
C28
4.7uF/6V3
STM_BOOT0
0R
R62
STM_NRST
0R
R86
STA_TMR_Reset
UPS_ONOFF
ULED
BOOST_ONOFF
5V0_CBL_ONOFF
CHG_ONOFF
SCBA_ONOFF
CB CTRL BUS
R19
330
R20
330
R21
330
VEPR_LEVEL
SCBA_Level
5V0_CBL_Level
A/D Inputs
C30
1n2
C31
1n2
C32
1n2
STATUS_LED
RUN_LED
ERROR_LED
IMC0805ERR22J01
L3
C34
100nF
C35
100nF
C36
1uF/6V3
D5
5V0_CBL
5V0_UPS
BAT54CLT3G
U6
TPS7A0533PDBVR
VIN
VOUT
EN
GND
NC
C205
22uF/6V3
C206
22uF/6V3
TP Small
PP3
GND
Project: Xtronica CB.PrjPcb
Variants: [No Variations]
Title: CPU
Size: A4
Number: 010225
Revision: 001
Date: 6/21/2025 Time: 1:14:18 AM
Sheet 3 of 22
File: XTRCB_CPU.SchDoc
Rjukan
Head Office/Factory
Hydroparken 270,
NO-3661 Rjukan,
Norway
XTRONICA

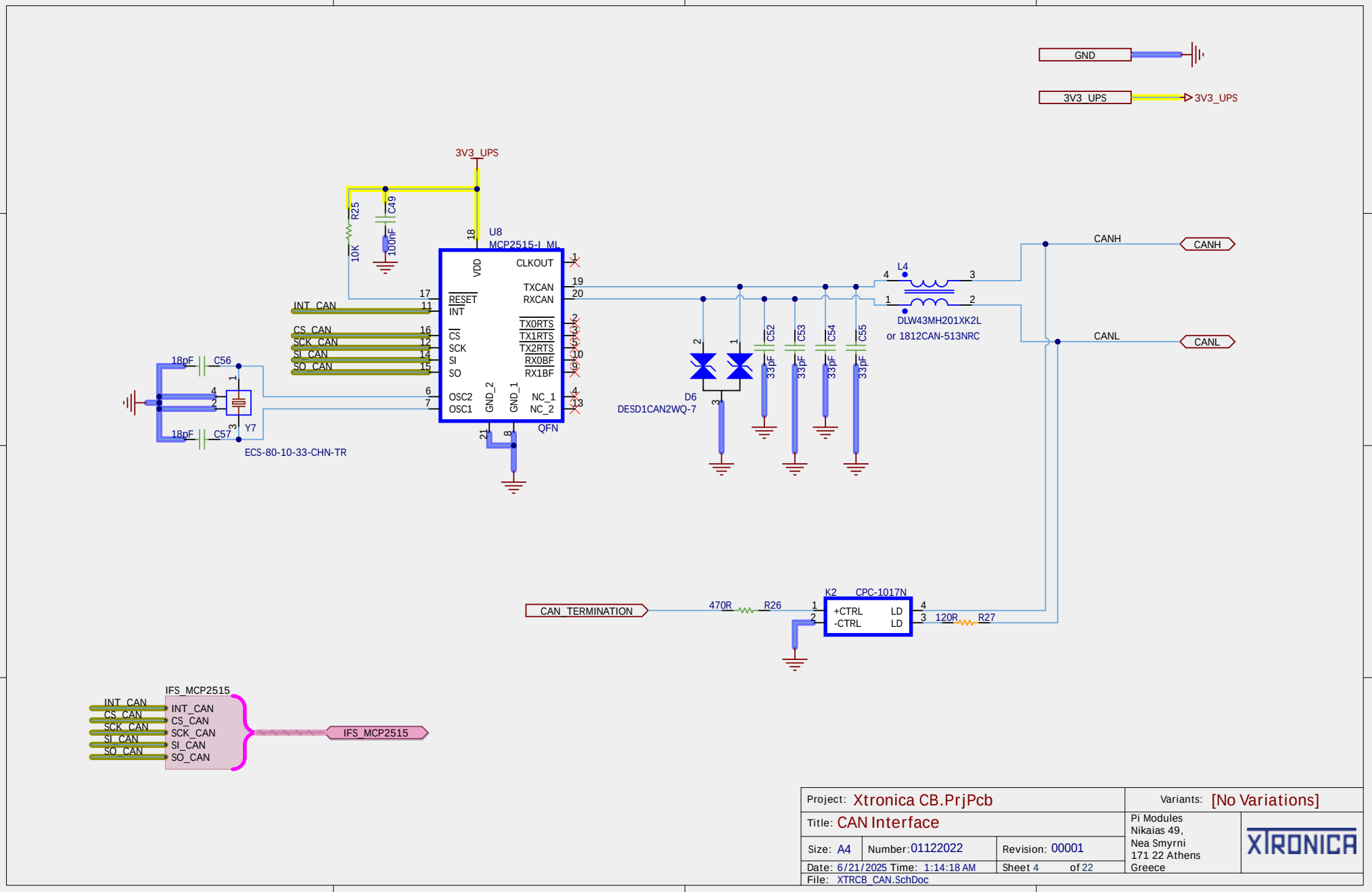

Project: Xtronica CB.PrjPcb			Variants: [No Variations]
Title: CAN Interface			Pi Modules Nikaias 49, Nea Smyrni 171 22 Athens Greece
Size: A4	Number: 01122022	Revision: 00001	XTRONICA
Date: 6/21/2025 Time: 1:14:18 AM		Sheet 4 of 22	
File: XTRCB_CAN.SchDoc			

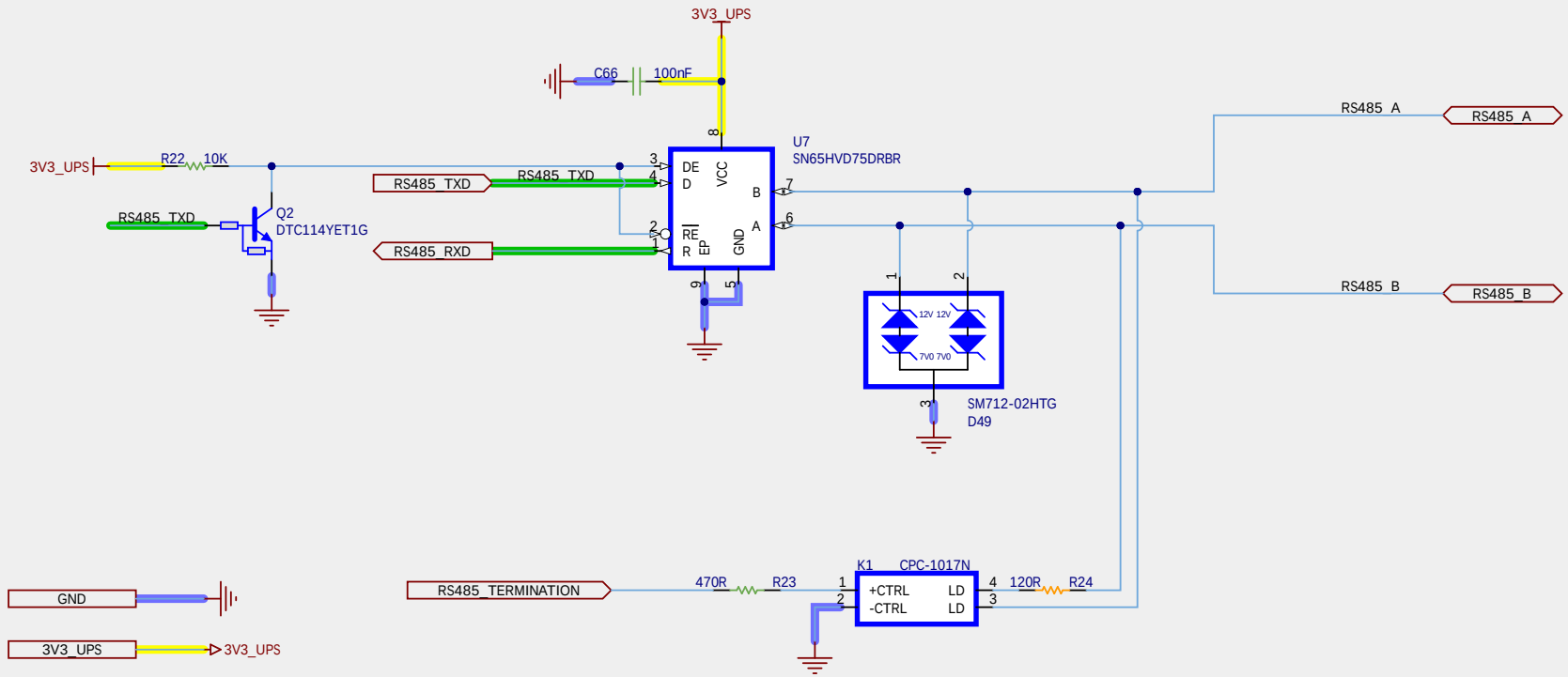

Project: Xtronica CB.PrjPcb			Variants: [No Variations]
Title: RS485			Pi Modules Nikaias 49, Nea Smyrni 171 22 Athens Greece
Size: A4	Number: 01122022	Revision: 00001	XTRONICA
Date: 6/21/2025 Time: 1:14:19 AM		Sheet 5 of 22	
File: XTRCB_RS485.SchDoc			

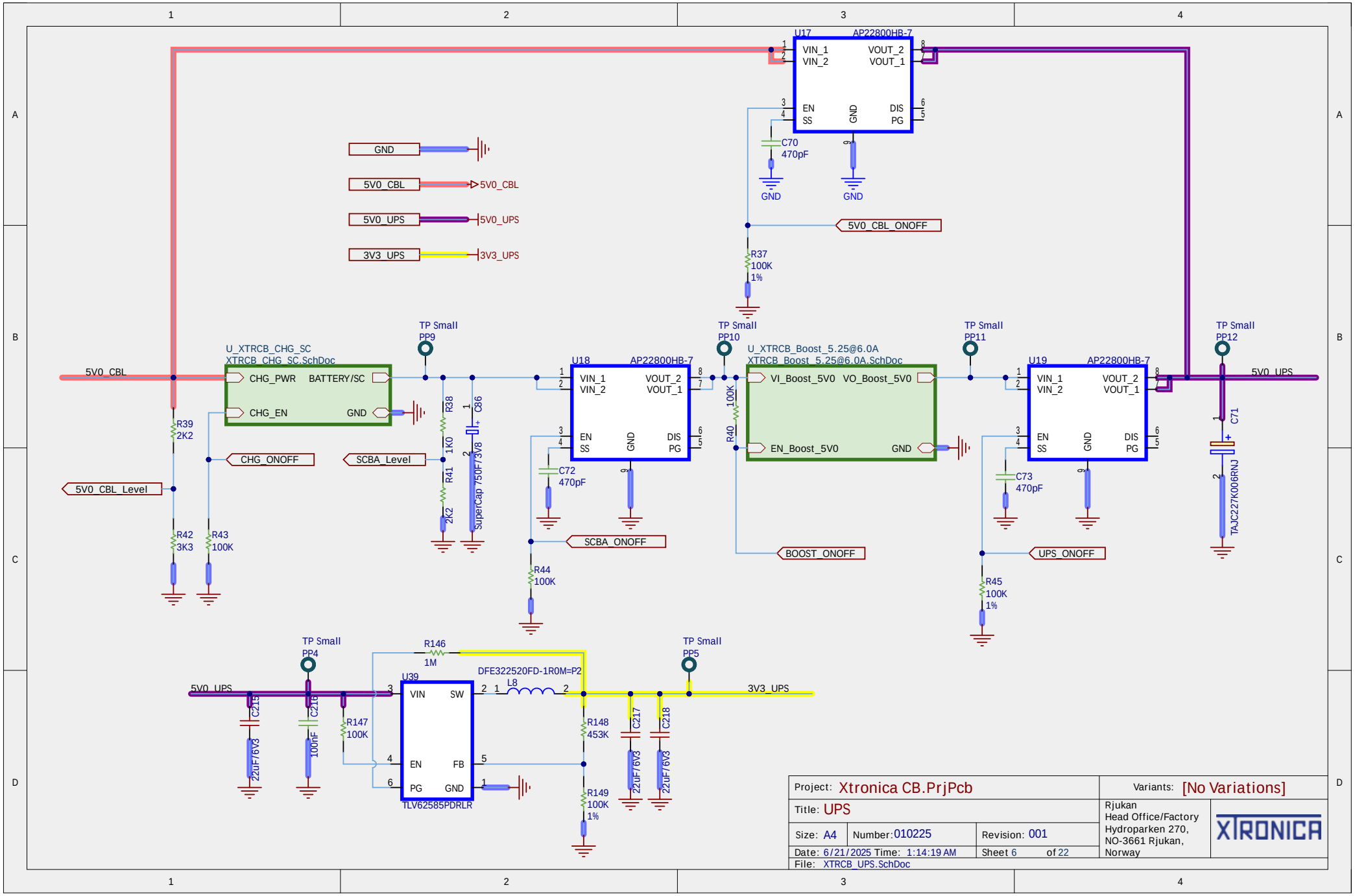

Project: Xtronica CB.PrjPcb			Variants: [No Variations]
Title: UPS			Rjukan Head Office/Factory Hydroparken 270, NO-3661 Rjukan, Norway
Size: A4	Number: 010225	Revision: 001	XTRONICA
Date: 6/21/2025 Time: 1:14:19 AM		Sheet 6 of 22	
File: XTRCB_UPS.SchDoc			

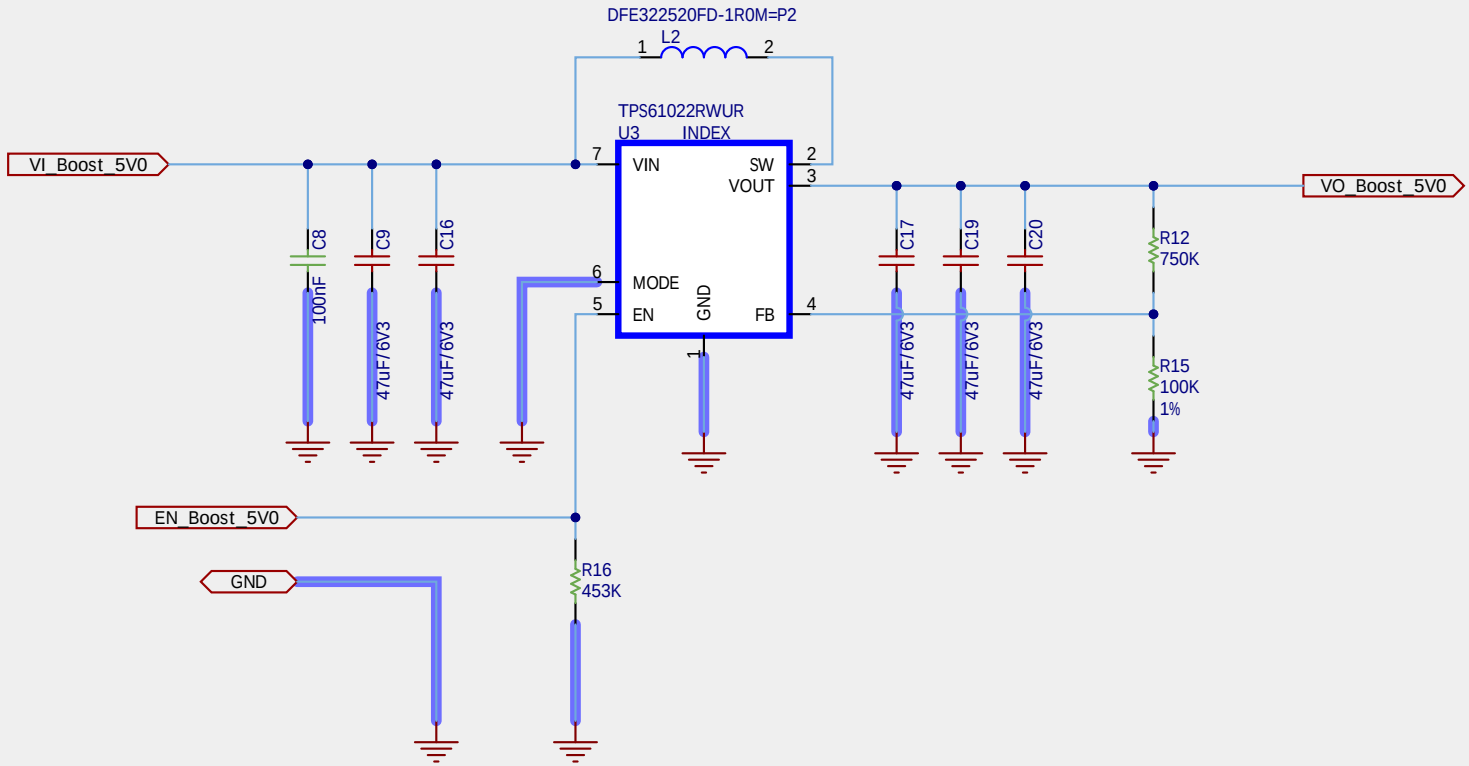

Project: Xtronica CB.PrjPcb			Variants: [No Variations]
Title: 5.25@3A Boost Converter			Rjukan Head Office/Factory Hydroparken 270, NO-3661 Rjukan, Norway
Size: A	Number: 010225	Revision: 001	XTRONICA
Date: 6/21/2025 Time: 1:14:19 AM		Sheet 7 of 22	
File: XTRCB_Boost_5.25@6.0A.SchDoc			

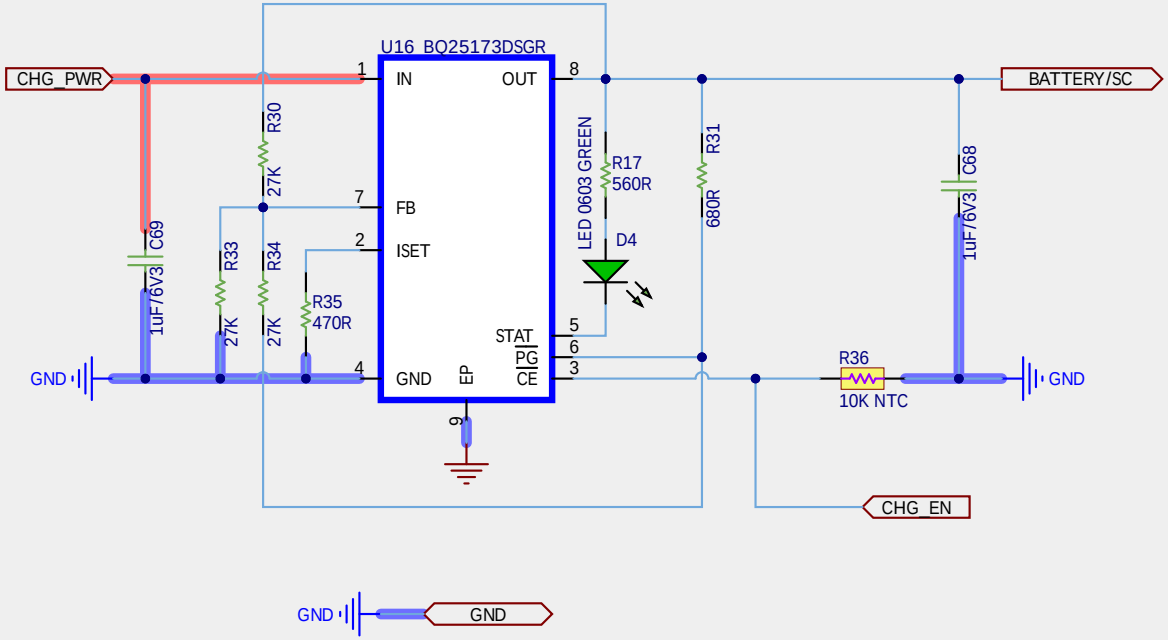

Project: Xtronica CB.PrjPcb			Variants: [No Variations]
Title: Super Capaciotr Charger 800mA			Rjukan Head Office/Factory Hydroparken 270, NO-3661 Rjukan, Norway
Size: A	Number: 010225	Revision: 001	XTRONICA
Date: 6/21/2025 Time: 1:14:19 AM		Sheet 8 of 22	
File: XTRCB_CHG_SC.SchDoc			

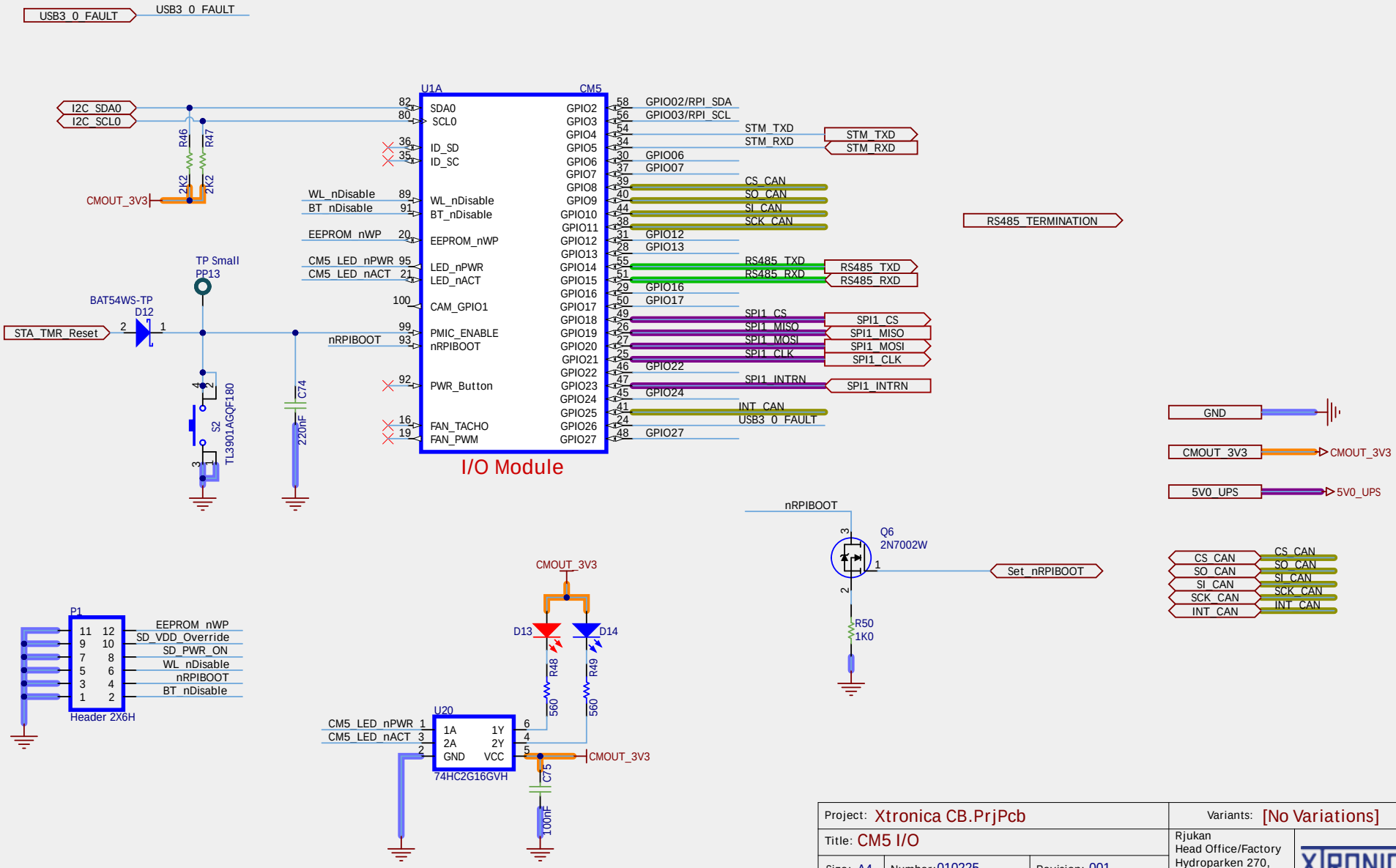
USB3_0_FAULT
USB3_0_FAULT
I2C_SDA0
I2C_SCL0
R46
R47
2K2
2K2
CMOUT_3V3
U1A
CM5
SDA0
SCL0
ID_SD
ID_SC
WL_nDisable
BT_nDisable
EEPROM_nWP
LED_nPWR
LED_nACT
CAM_GPIO1
PMIC_ENABLE
nRPIBOOT
PWR_Button
FAN_TACHO
FAN_PWM
GPIO2
GPIO3
GPIO4
GPIO5
GPIO6
GPIO7
GPIO8
GPIO9
GPIO10
GPIO11
GPIO12
GPIO13
GPIO14
GPIO15
GPIO16
GPIO17
GPIO18
GPIO19
GPIO20
GPIO21
GPIO22
GPIO23
GPIO24
GPIO25
GPIO26
GPIO27
GPIO02/RPI_SDA
GPIO03/RPI_SCL
STM_TXD
STM_RXD
GPIO06
GPIO07
CS_CAN
SO_CAN
SI_CAN
SCK_CAN
GPIO12
GPIO13
RS485_TXD
RS485_RXD
GPIO16
GPIO17
SPI1_CS
SPI1_MISO
SPI1_MOSI
SPI1_CLK
GPIO22
SPI1_INTRN
GPIO24
INT_CAN
USB3_0_FAULT
GPIO27
I/O Module
RS485_TERMINATION
TP Small
PP13
BAT54WS-TP
D12
STA_TMR_Reset
S2
TL3901AGQF180
C74
220nF
GND
CMOUT_3V3
5V0_UPS
nRPIBOOT
Q6
2N7002W
Set_nRPIBOOT
R50
1K0
P1
EEPROM_nWP
SD_VDD_Override
SD_PWR_ON
WL_nDisable
nRPIBOOT
BT_nDisable
Header 2X6H
D13
D14
R48
R49
560
560
U20
CM5_LED_nPWR
CM5_LED_nACT
1A
2A
GND
1Y
2Y
VCC
74HC2G16GVH
C75
100nF
Project: Xtronica CB.PrjPcb
Variants: [No Variations]
Title: CM5 I/O
Size: A4
Number: 010225
Revision: 001
Date: 6/21/2025 Time: 1:14:19 AM
Sheet 9 of 22
File: CM5_IO.SchDoc
Rjukan
Head Office/Factory
Hydroparken 270,
NO-3661 Rjukan,
Norway
XTRONICA

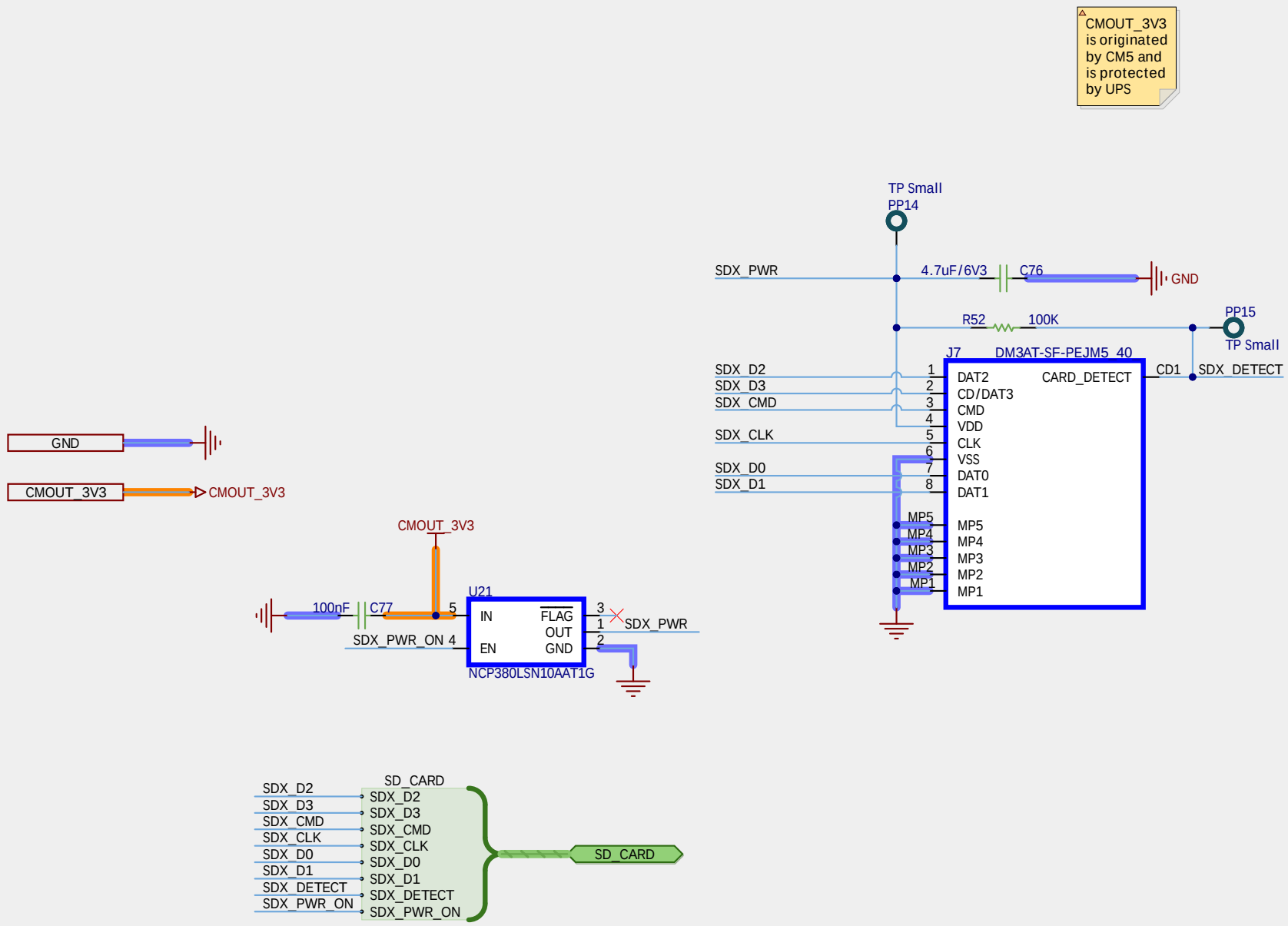

Project: Xtronica CB.PrjPcb			Variants: [No Variations]
Title: SD_CARD			Rjukan Head Office/Factory Hydroparken 270, NO-3661 Rjukan, Norway
Size: A	Number: 010225	Revision: 001	XTRONICA
Date: 6/21/2025 Time: 1:14:20 AM		Sheet 10 of 22	
File: XTRCB_SD_CARD.SchDoc			

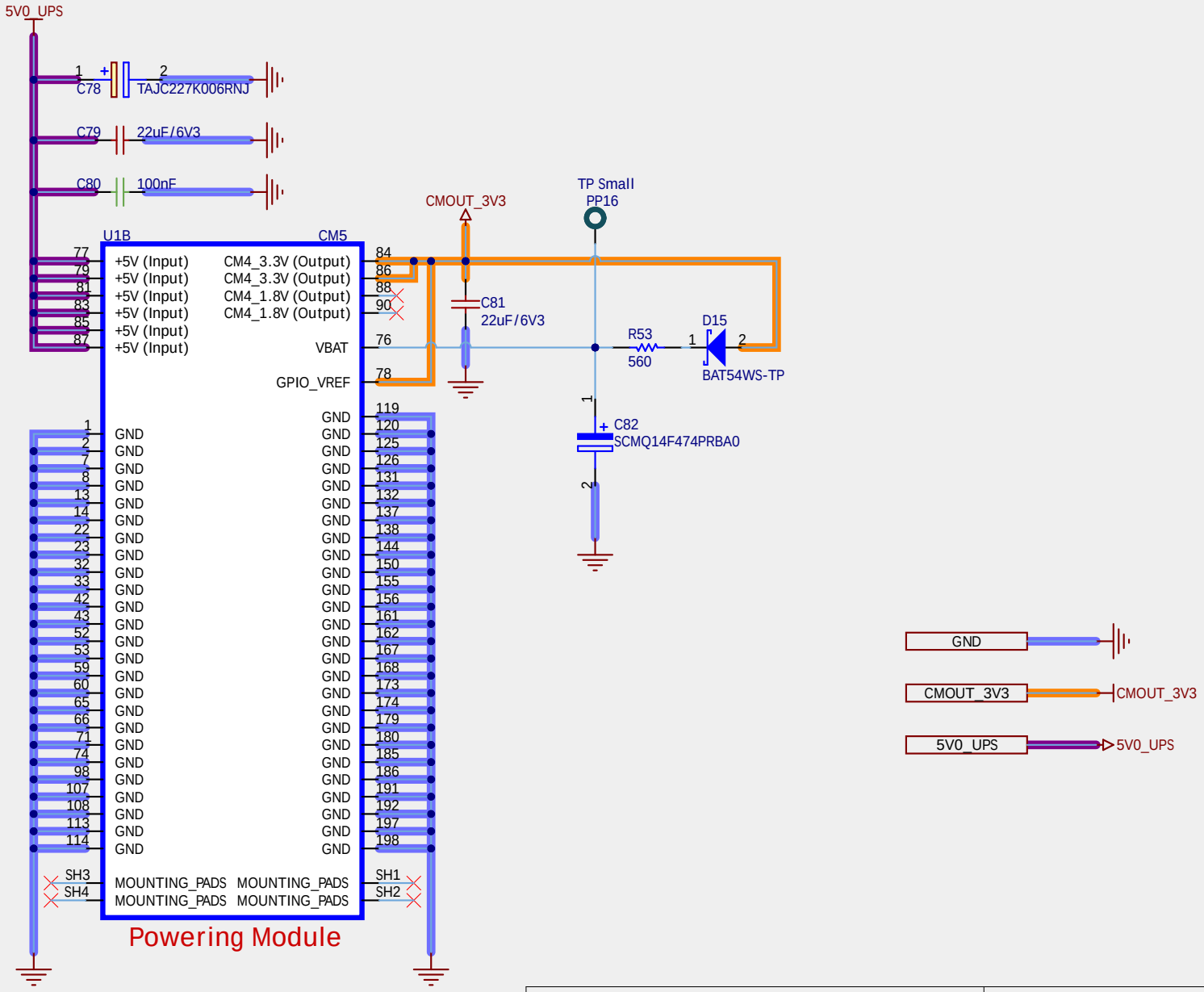

Project: Xtronica CB.PrjPcb			Variants: [No Variations]
Title: CM5 Powering			Rjukan Head Office/Factory Hydroparken 270, NO-3661 Rjukan, Norway
Size: A	Number: 010225	Revision: 001	XTRONICA
Date: 6/21/2025 Time: 1:14:20 AM		Sheet 11 of 22	
File: XTRCB_CM5_POWERING.SchDoc			

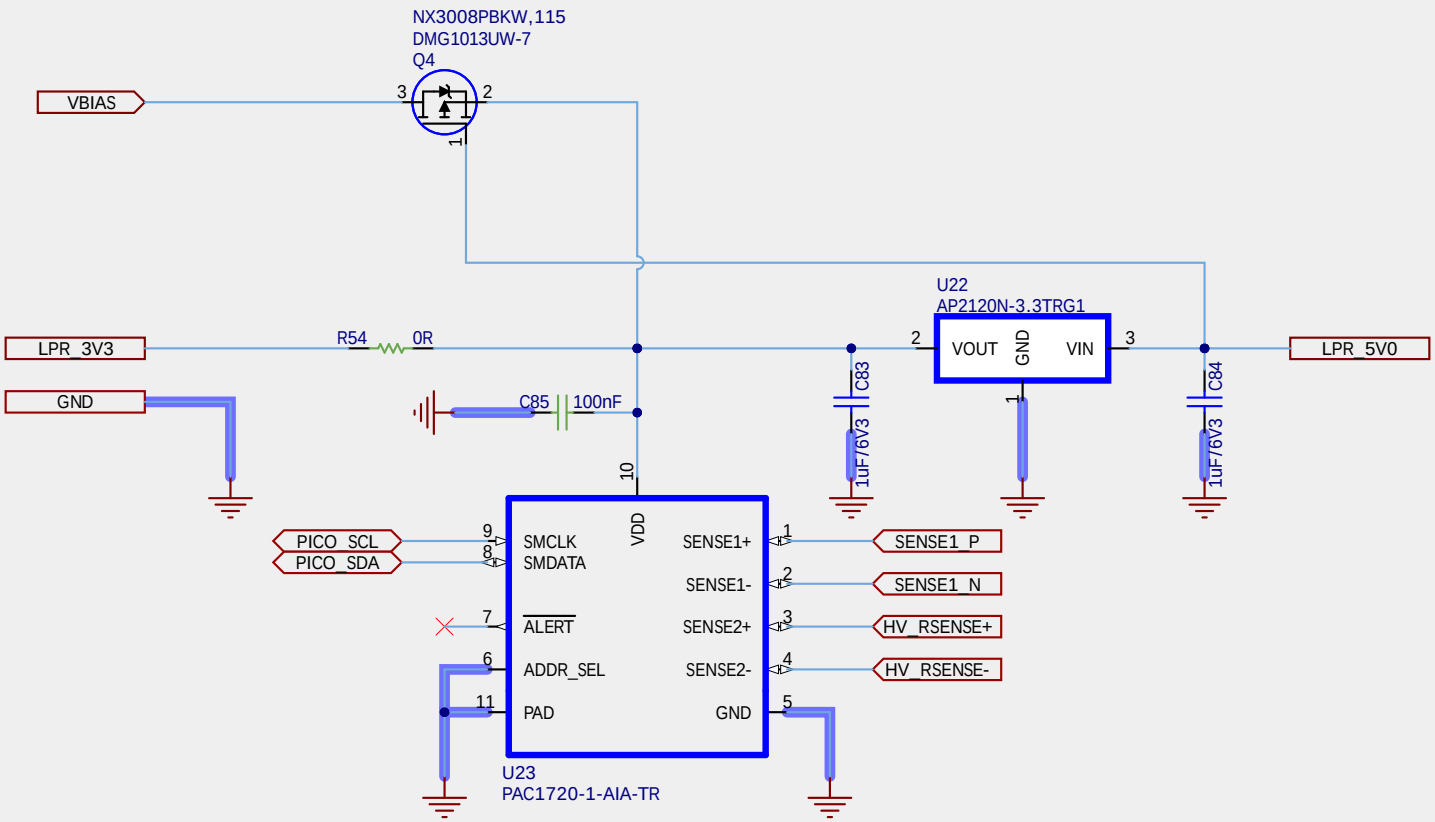

Project: Xtronica CB.PrjPcb			Variants: [No Variations]
Title: Current Sensor			Rjukan Head Office/Factory Hydroparken 270, NO-3661 Rjukan, Norway
Size: A	Number: 010225	Revision: 001	XTRONICA
Date: 6/21/2025 Time: 1:14:20 AM		Sheet 12 of 22	
File: XTRCB_Current_Sensor.SchDoc			

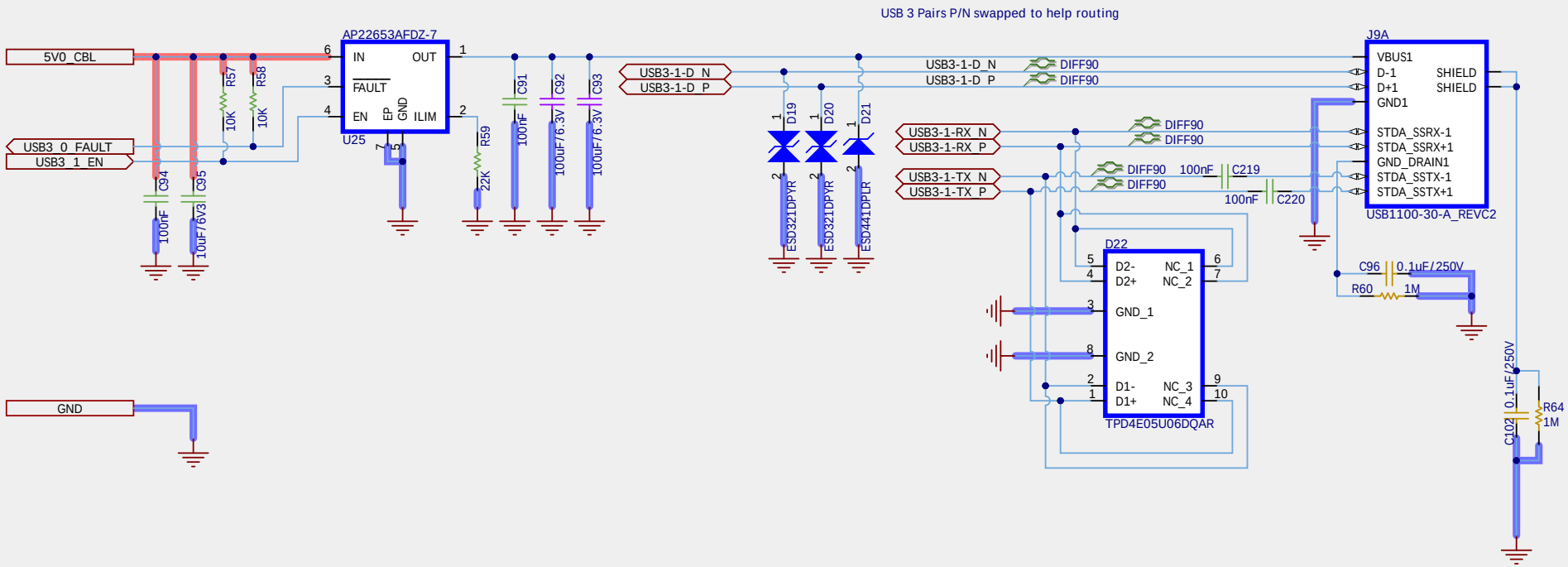

Project: Xtronica CB.PrjPcb			Variants: [No Variations]
Title: USB3.0 x 1			Rjukan Head Office/Factory Hydroparken 270, NO-3661 Rjukan, Norway
Size: A4	Number: 010225	Revision: 001	XTRONICA
Date: 6/21/2025 Time: 1:14:20 AM		Sheet 13 of 22	
File: XTRCB_1xUSB3_0.SchDoc			

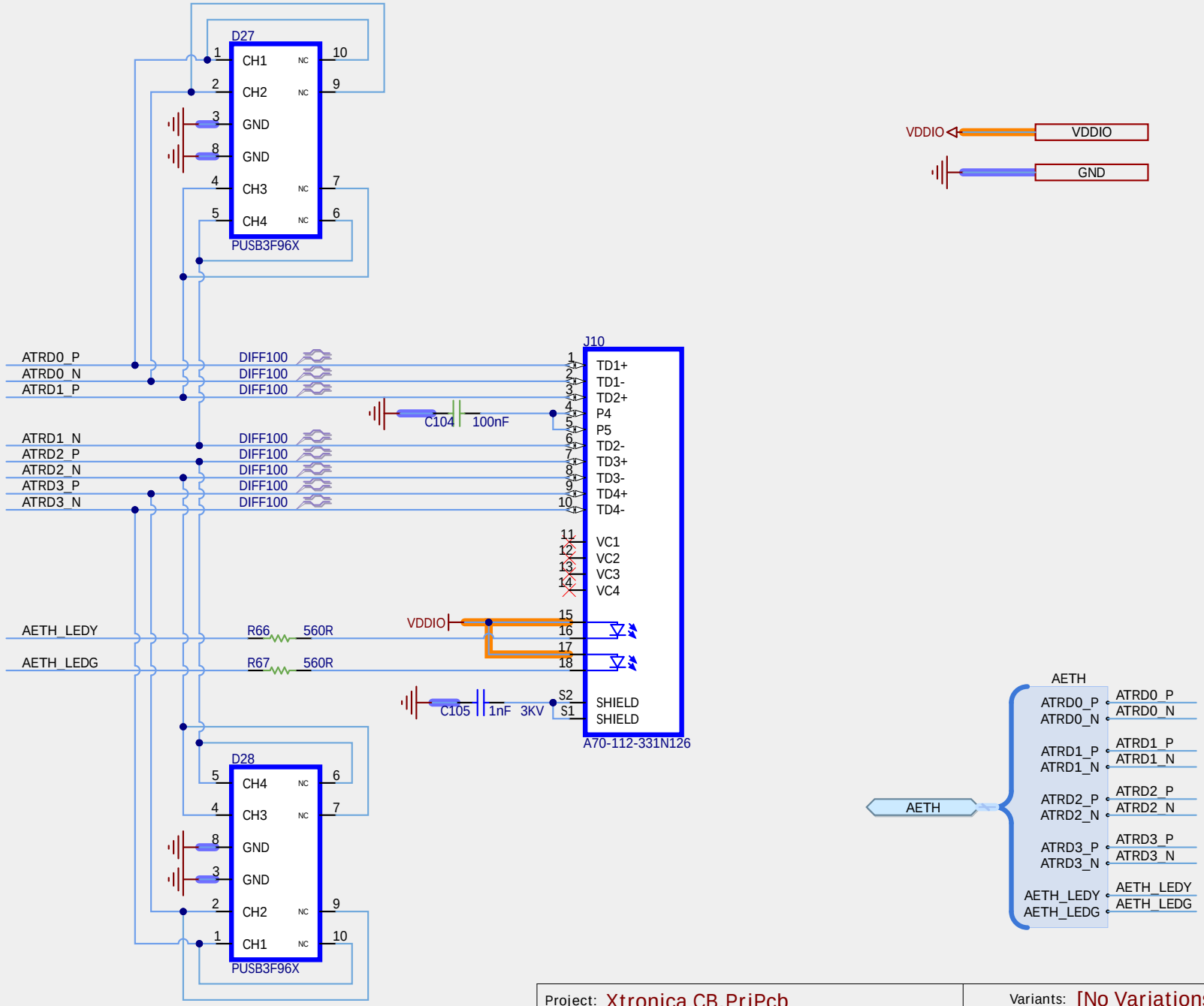

Project: Xtronica CB.PrjPcb			Variants: [No Variations]
Title: A_ETHERNET			Rjukan Head Office/Factory Hydroparken 270, NO-3661 Rjukan, Norway
Size: A	Number: 010225	Revision: 001	XTRONICA
Date: 6/21/2025 Time: 1:14:20 AM		Sheet 14 of 22	
File: XTRCB_ETHERNET_A.SchDoc			

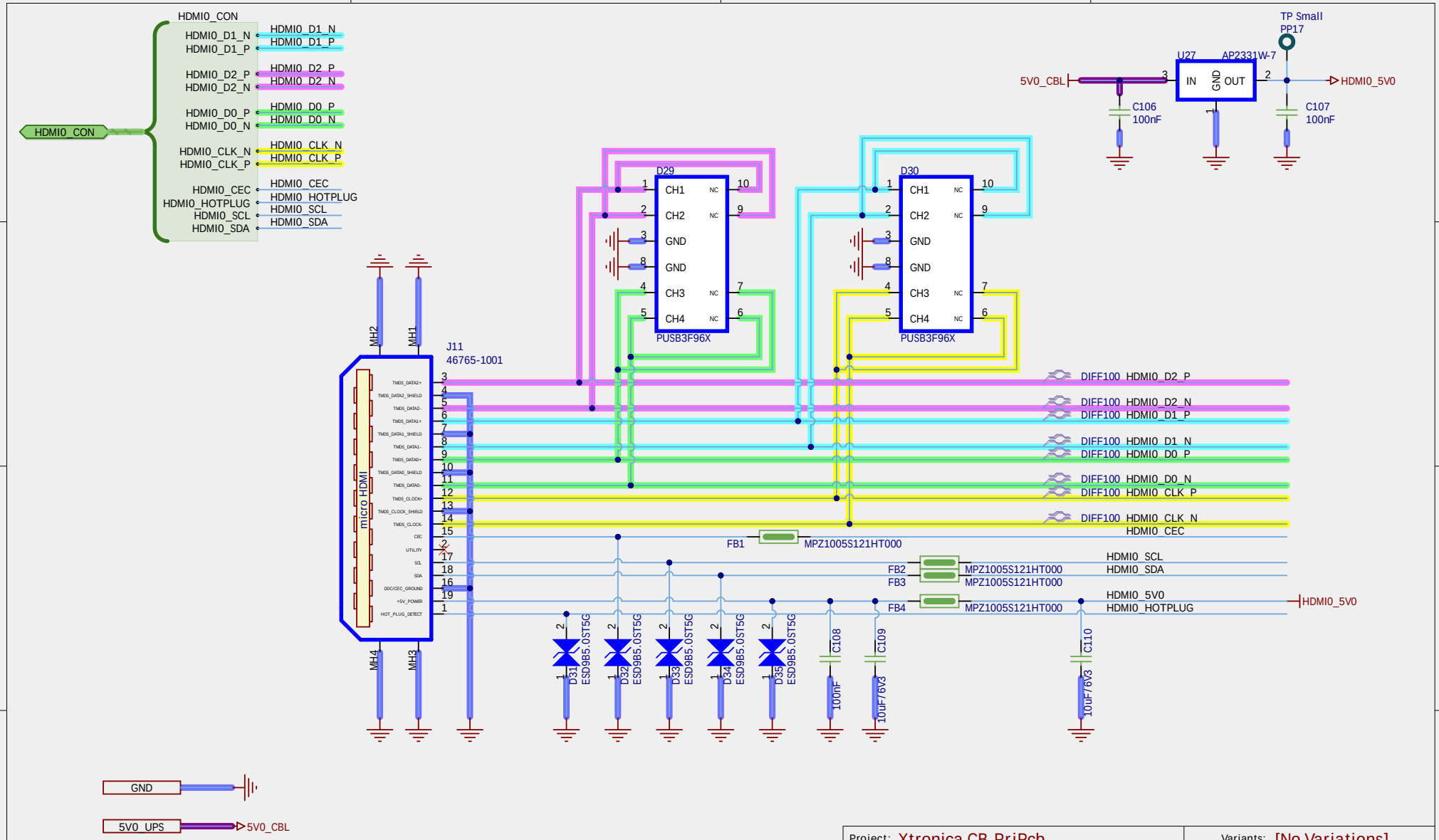

Project: Xtronica CB.PrjPcb			Variants: [No Variations]
Title: HDMI0 Interface			Rjukan Head Office/Factory Hydroparken 270, NO-3661 Rjukan, Norway
Size: A4	Number: 010225	Revision: 001	XTRONICA
Date: 6/21/2025 Time: 1:14:21 AM		Sheet 15 of 22	
File: XTRCB_HDMI0.SchDoc			

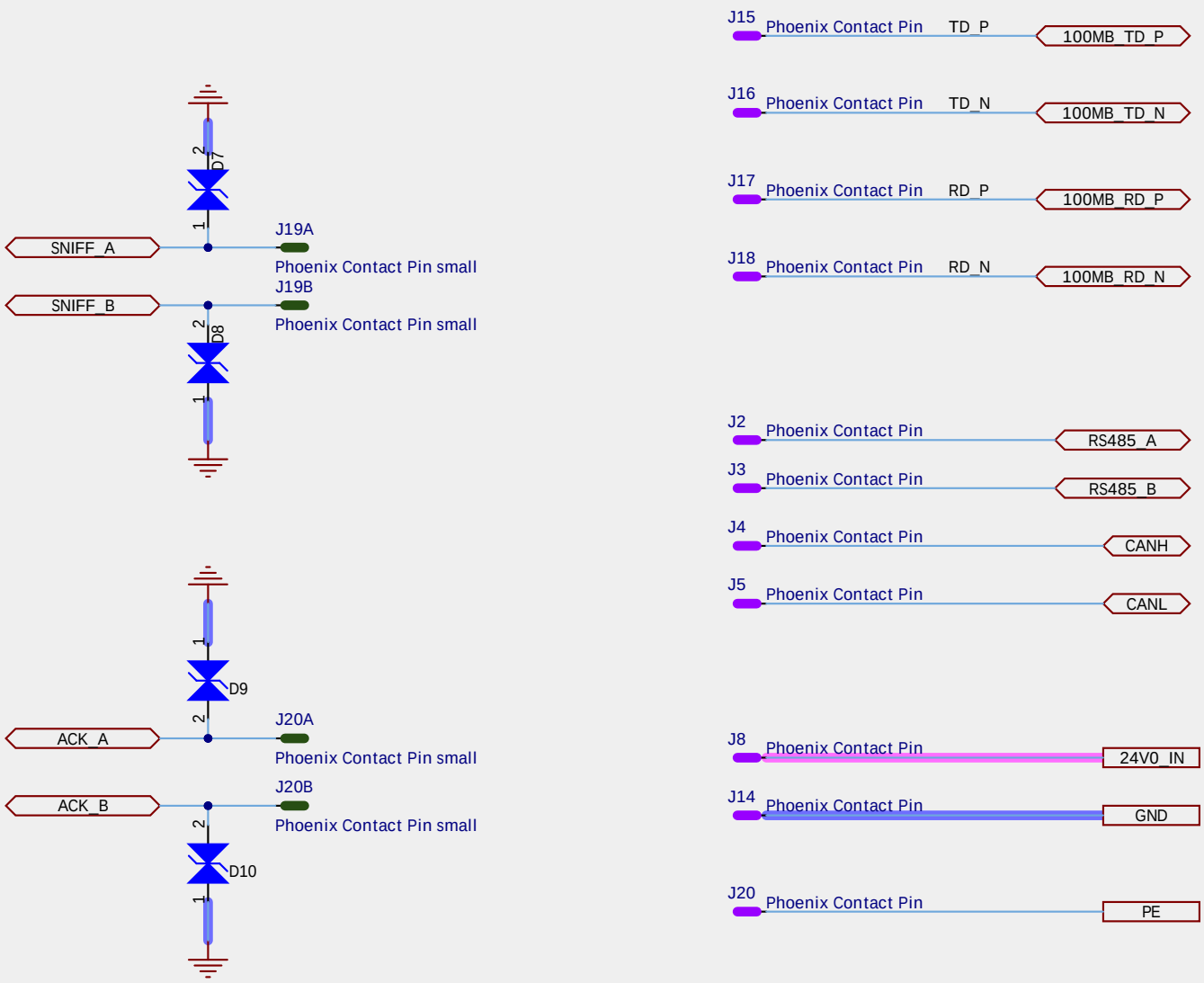

Project: Xtronica CB.PrjPcb			Variants: [No Variations]
Title: DIN BUS			Rjukan Head Office/Factory Hydroparken 270, NO-3661 Rjukan, Norway
Size: A	Number: 010225	Revision: 001	
Date: 6/21/2025 Time: 1:14:21 AM		Sheet 16 of 22	
File: XTRCB_DIN_BUS.SchDoc			

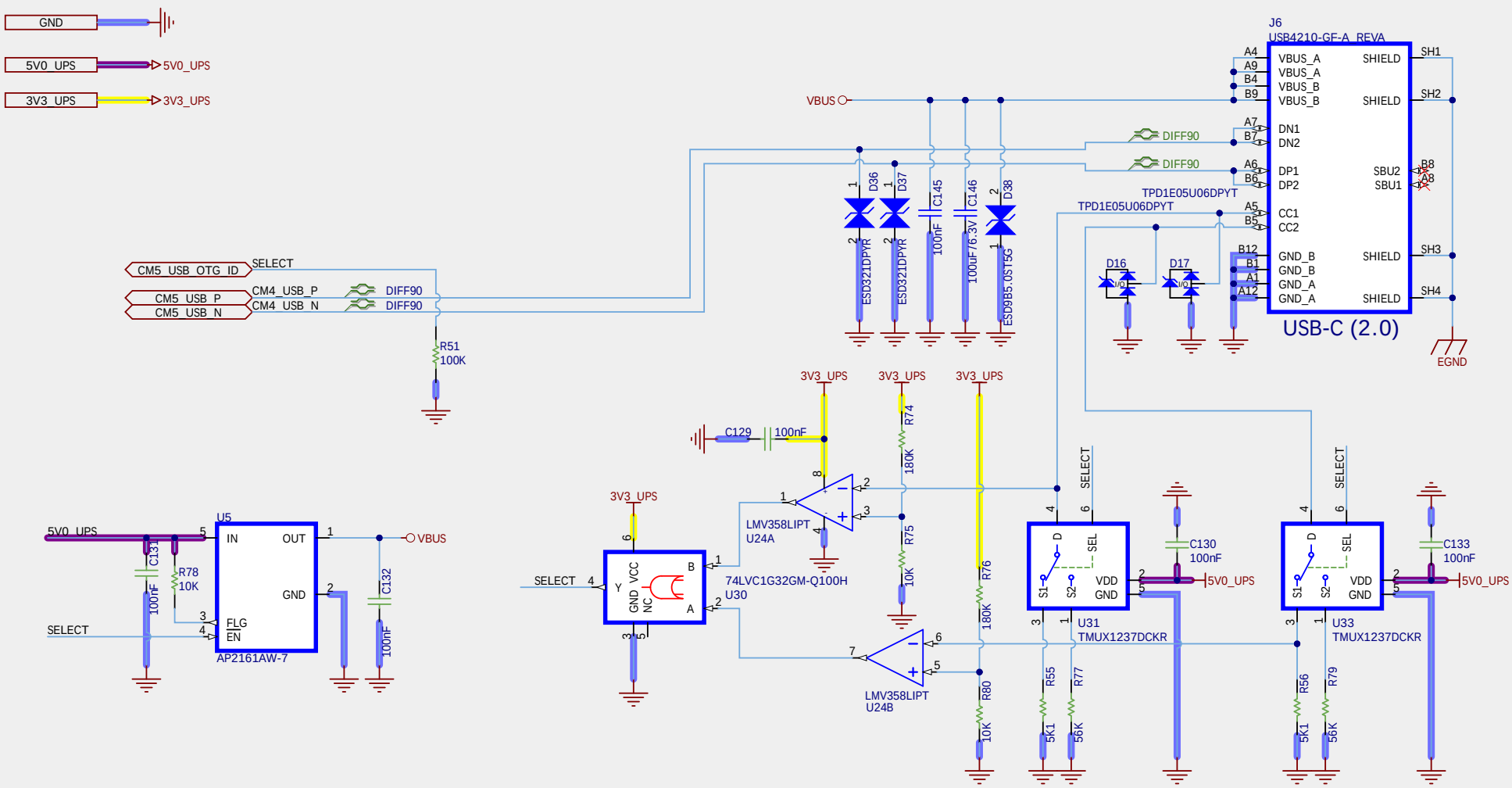

Project: Xtronica CB.PrjPcb			Variants: [No Variations]
Title: USB2.0 UFP DFP USBC			Rjukan Head Office/Factory Hydroparken 270, NO-3661 Rjukan, Norway
Size: A4	Number: 010225	Revision: 001	XTRONICA
Date: 6/21/2025 Time: 1:14:21 AM		Sheet 17 of 22	
File: USB2.0_UFP_DFP USBC.SchDoc			

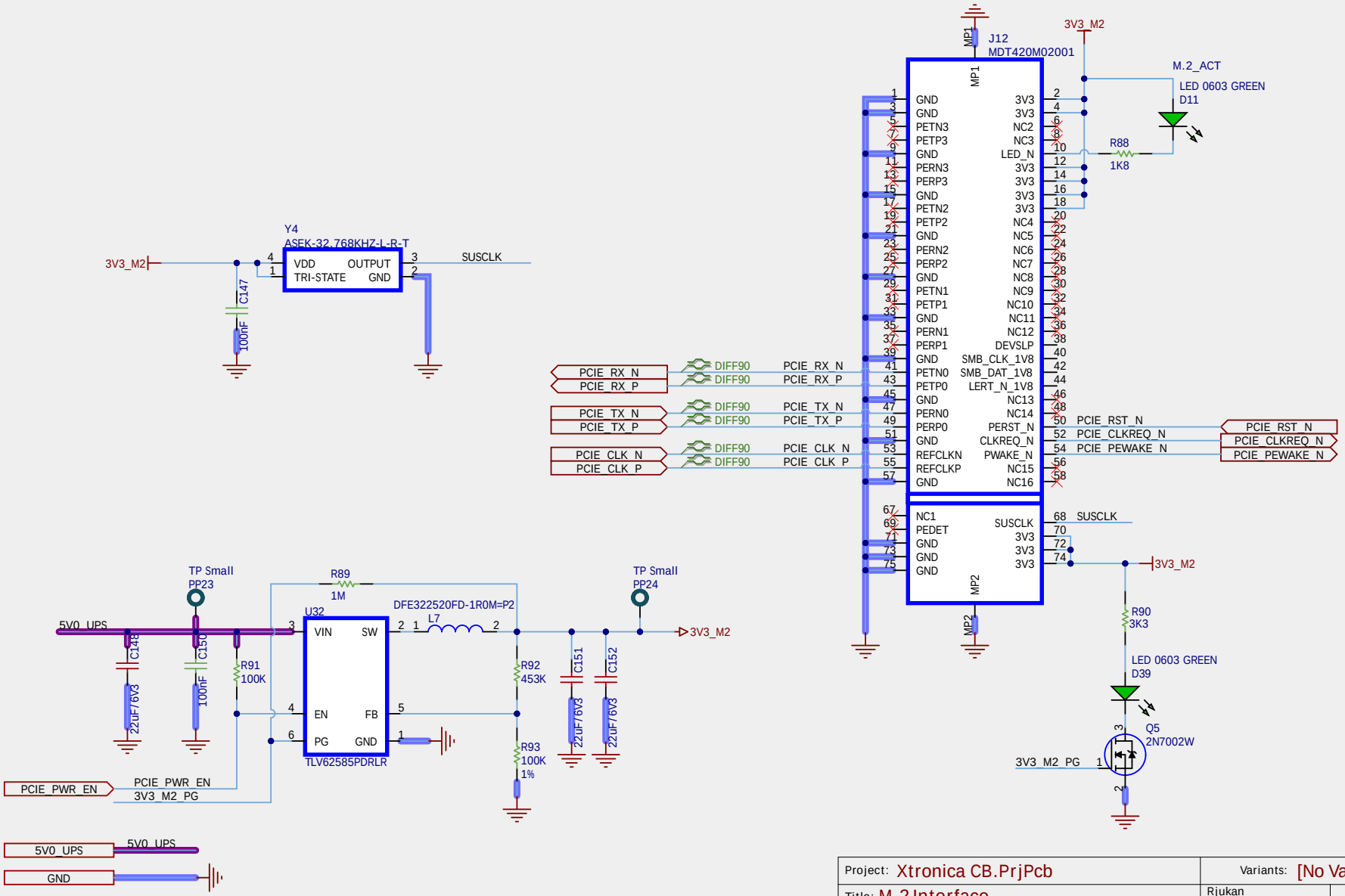

Project: Xtronica CB.PrjPcb			Variants: [No Variations]
Title: M.2 Interface			Rjukan Head Office/Factory Hydroparken 270, NO-3661 Rjukan, Norway
Size: A4	Number: 010225	Revision: 001	XTRONICA
Date: 6/21/2025 Time: 1:14:21 AM		Sheet 18 of 22	
File: XTRCB_M.2.SchDoc			

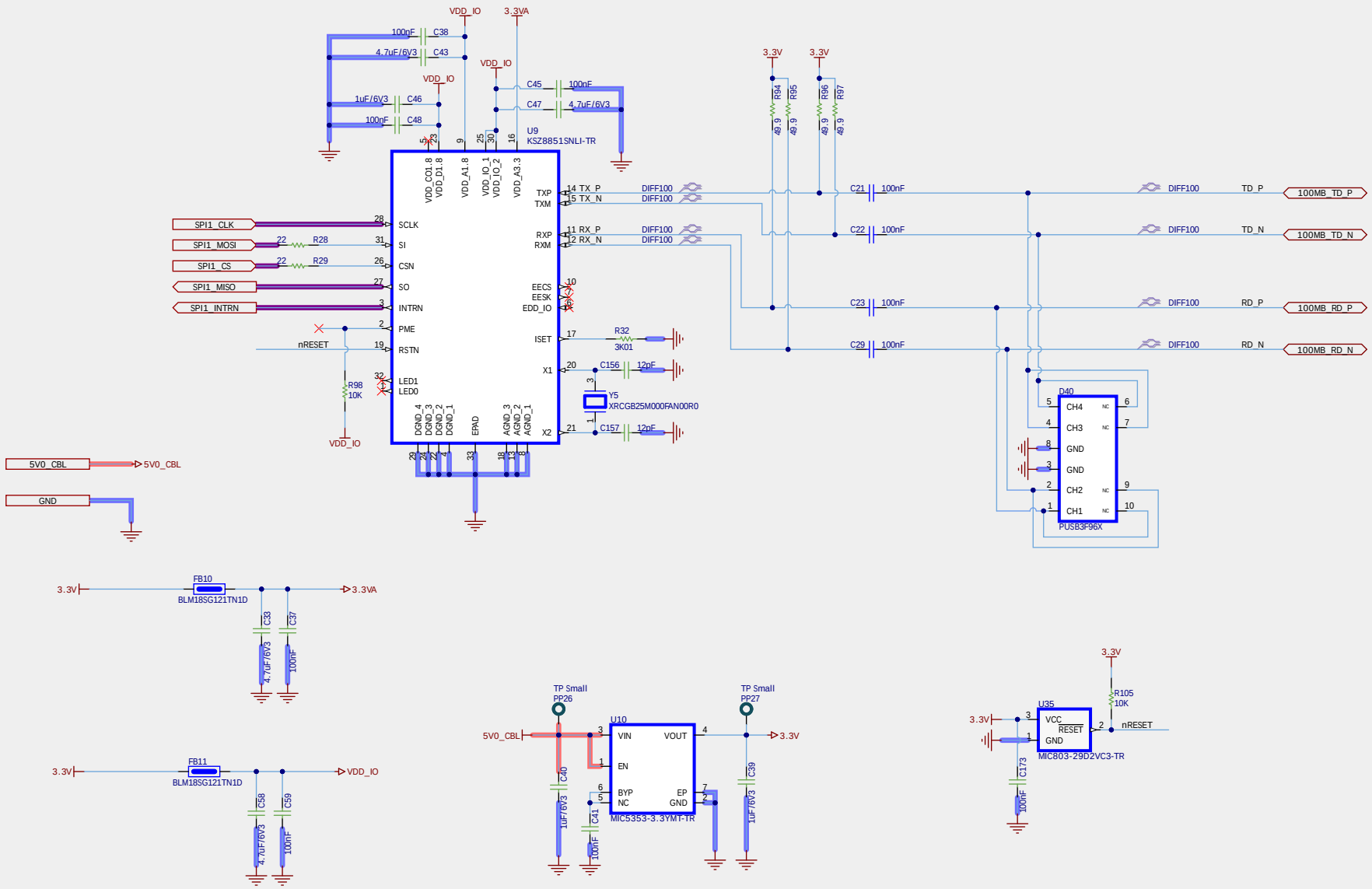

Project: Xtronica CB.PrjPcb			Variants: [No Variations]
Title: 100MB Etherent			Rjukan Head Office/Factory Hydroparken 270, NO-3661 Rjukan, Norway
Size: A3	Number: 010225	Revision: 001	XTRONICA
Date: 6/21/2025 Time: 1:14:22 AM		Sheet 19 of 22	
File: XTRCB_100MB Etherent.SchDoc.SchDoc			

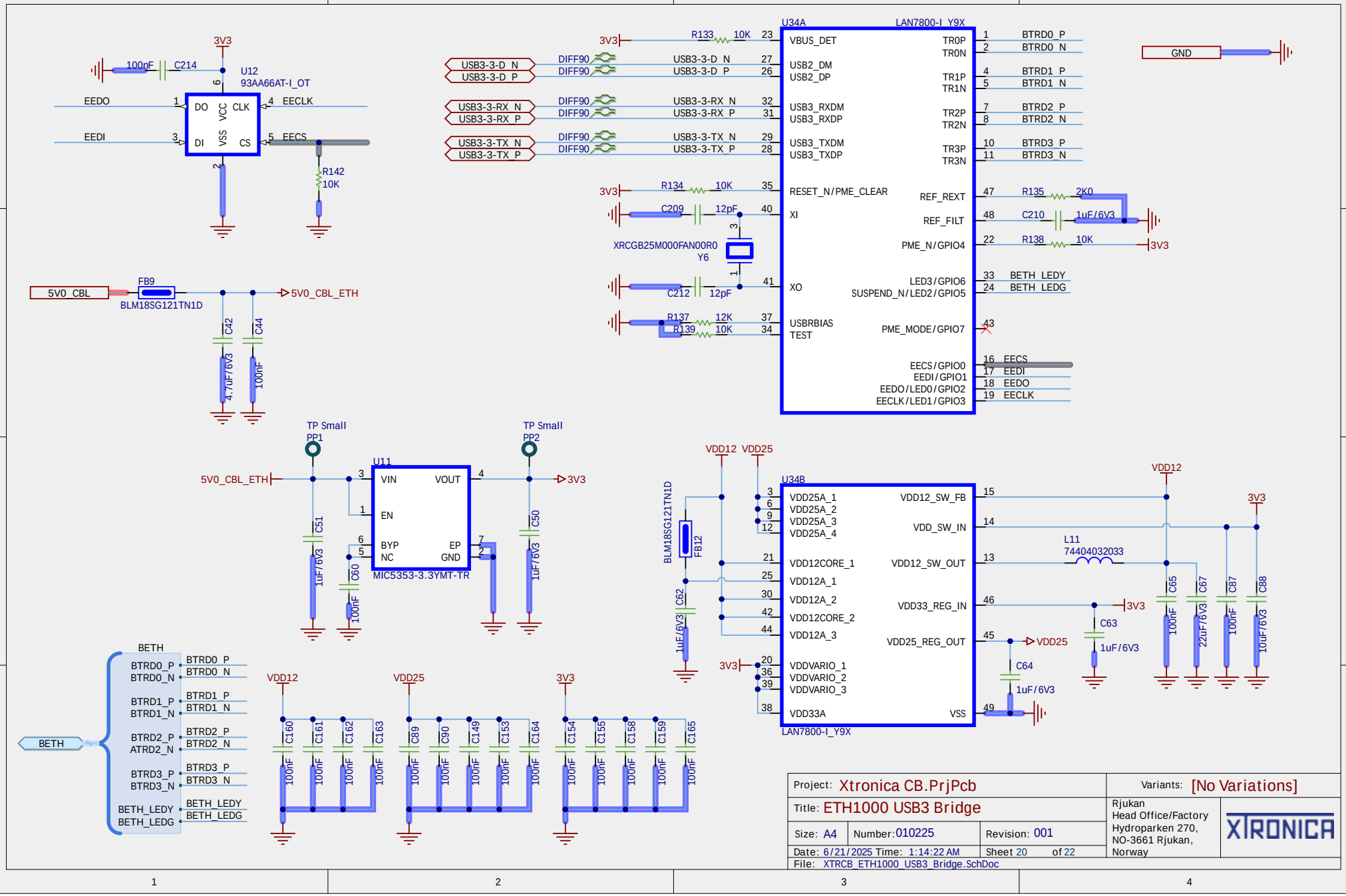

Project: Xtronica CB.PrjPcb			Variants: [No Variations]
Title: ETH1000 USB3 Bridge			Rjukan Head Office/Factory Hydroparken 270, NO-3661 Rjukan, Norway
Size: A4	Number: 010225	Revision: 001	XTRONICA
Date: 6/21/2025 Time: 1:14:22 AM		Sheet 20 of 22	
File: XTRCB_ETH1000_USB3_Bridge.SchDoc			

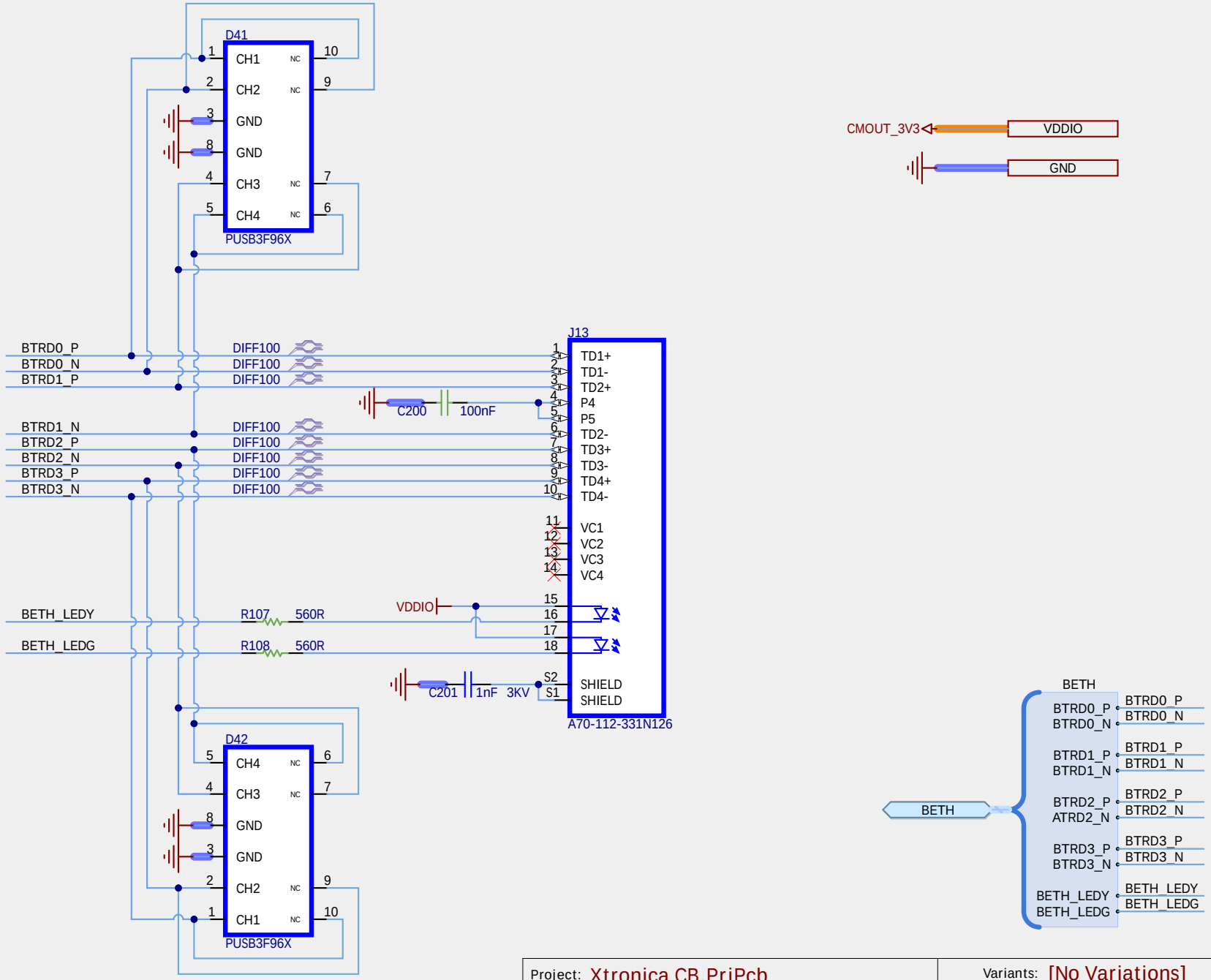

Project: Xtronica CB.PrjPcb			Variants: [No Variations]
Title: A_ETHERNET			Rjukan Head Office/Factory Hydroparken 270, NO-3661 Rjukan, Norway
Size: A	Number: 010225	Revision: 001	XTRONICA
Date: 6/21/2025 Time: 1:14:22 AM		Sheet 21 of 22	
File: XTRCB_ETHERNET_B.SchDoc			

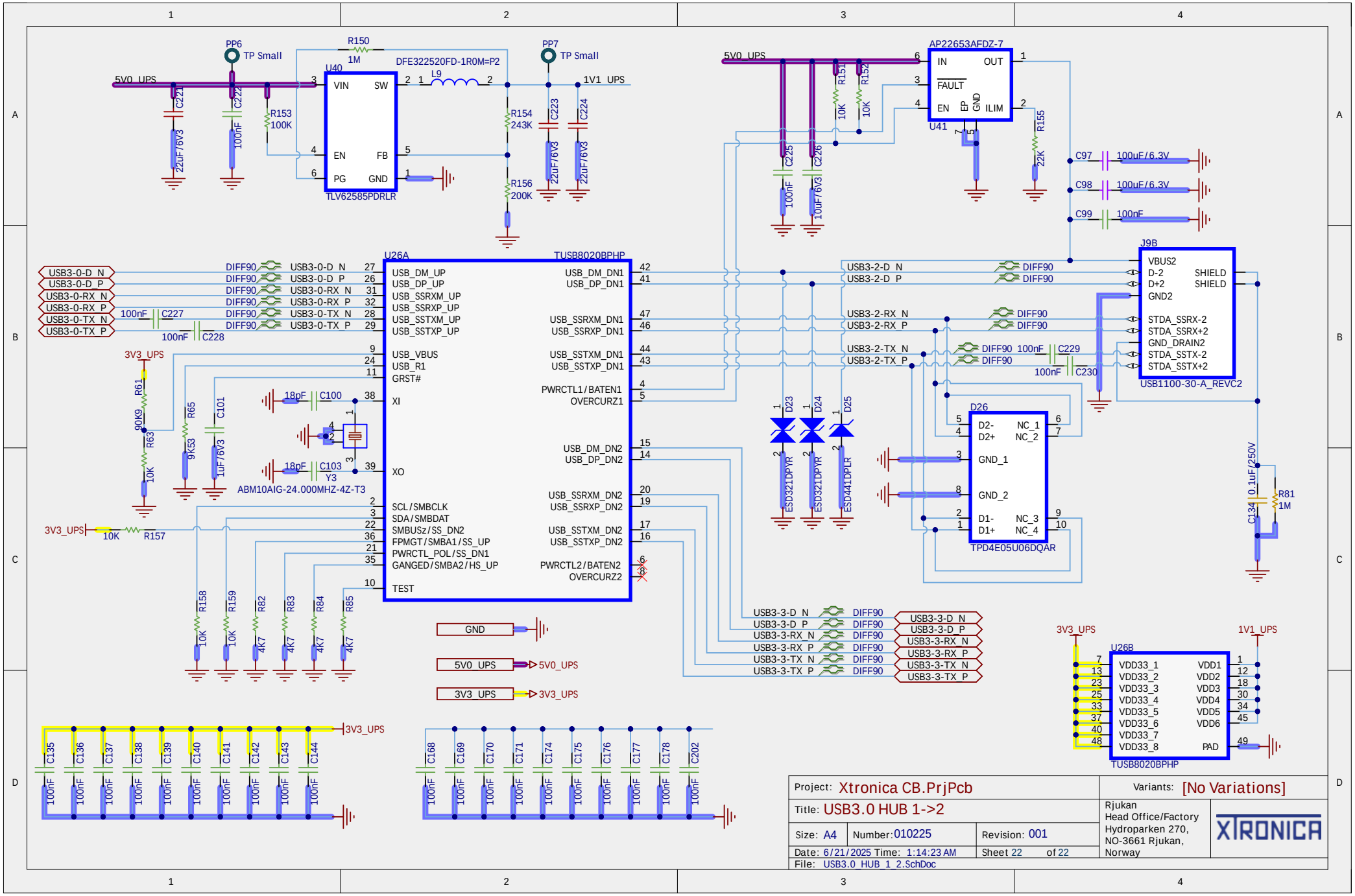

Project: Xtronica CB.PrjPcb			Variants: [No Variations]
Title: USB3.0 HUB 1->2			Rjukan Head Office/Factory Hydroparken 270, NO-3661 Rjukan, Norway
Size: A4	Number: 010225	Revision: 001	XTRONICA
Date: 6/21/2025 Time: 1:14:23 AM		Sheet 22 of 22	
File: USB3.0_HUB_1_2.SchDoc			

Board Stack Report